FRANK PROGRESS ANDERSON
ND/ELECT/20/049

PRACTICAL MANUAL

ON

BASIC CIRCUIT DESIGN II

BY

ENGR. EBIMOBOWEI T. YABEFA

CamScanner

PRACTICAL MANUAL

ON

BASIC CIRCUIT DESIGN II

BY

ENGR. EBIMOBOWEI T. YABEFA

CamScanner

CamScanner

Experiment 1: Draw the bradboard and veroboard loyouts of the circuit diagram shown in figure 1 below.

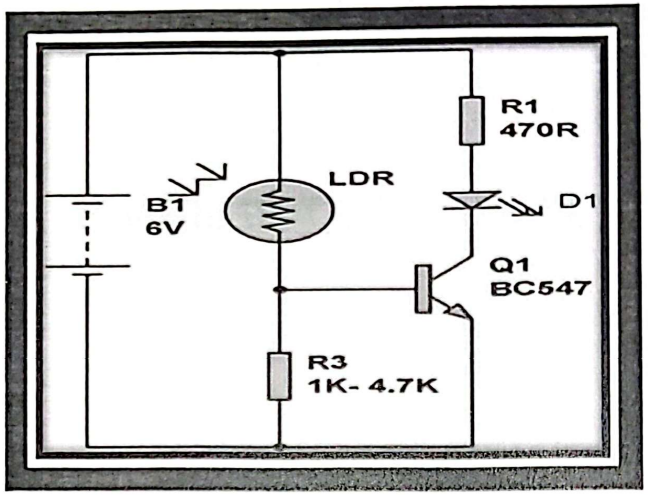

CamScanner

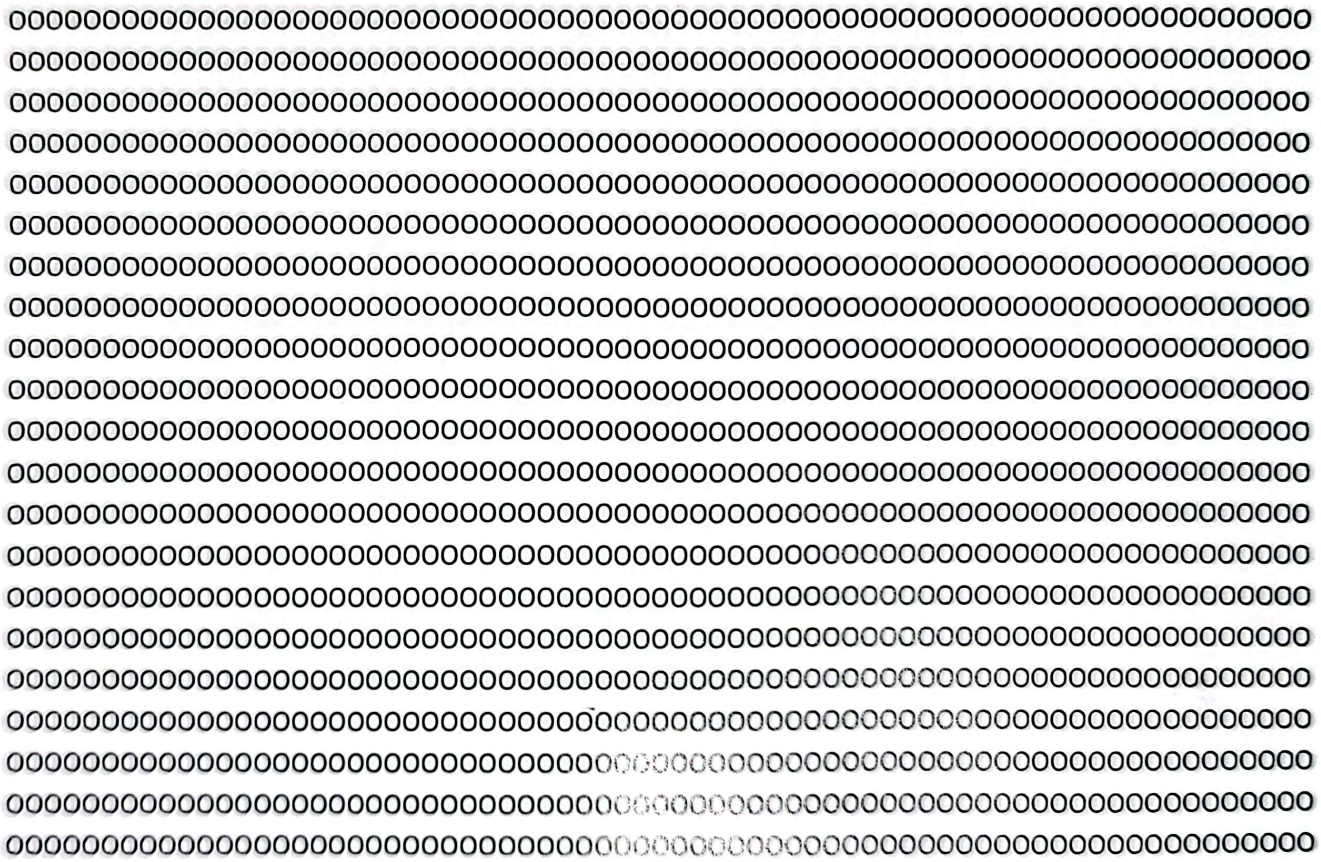

CamScanner

Experiment 2: Draw the bradboard and veroboard loyouts of the circuit diagram shown in figure 2 below

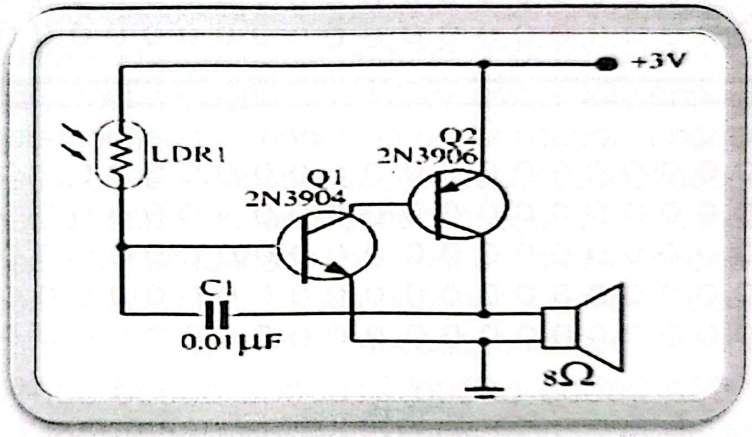

CamScanner

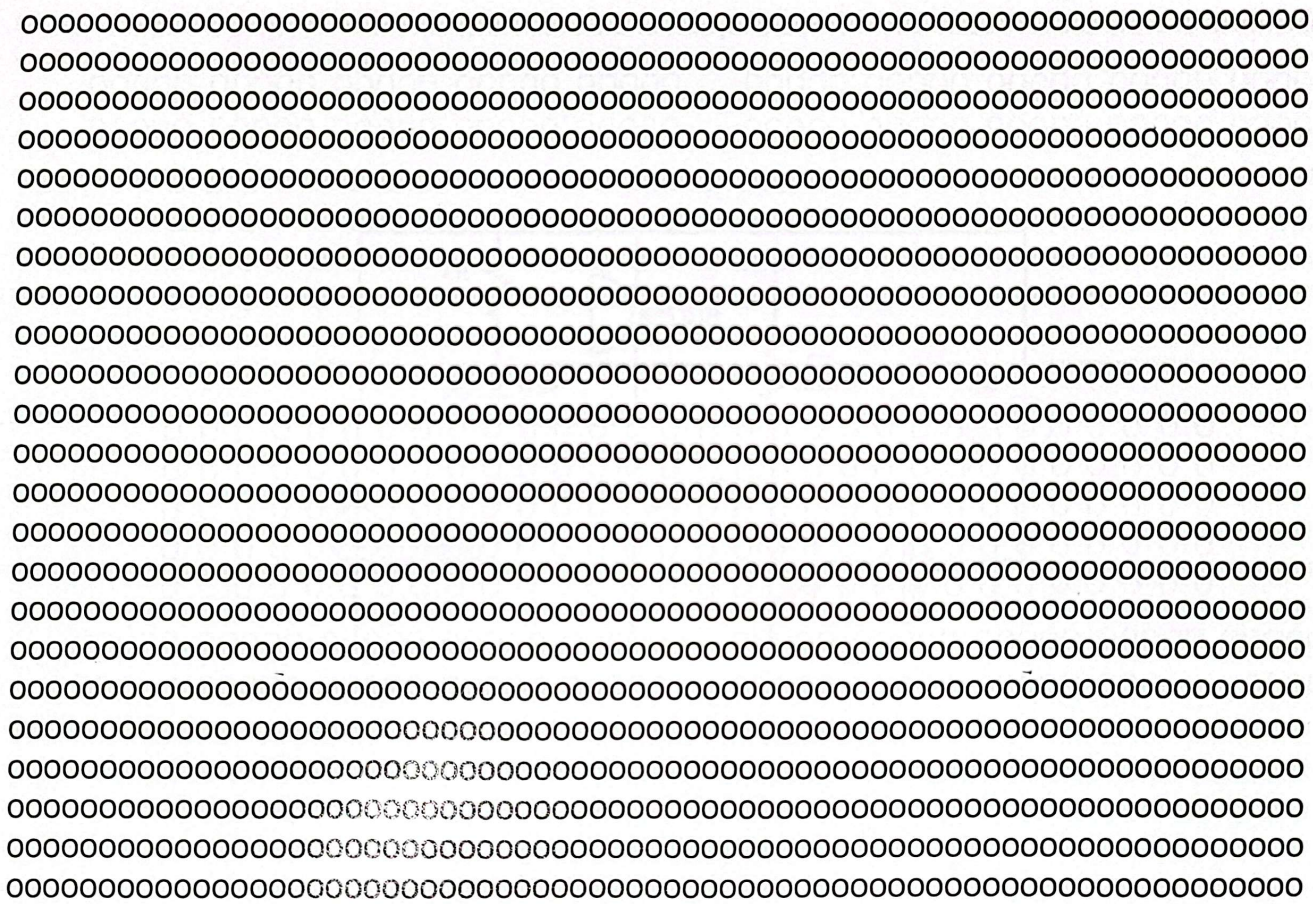

CamScanner

Experiment 3: Draw the bradboard and veroboard loyouts of the circuit diagram shown in figure 3 below.

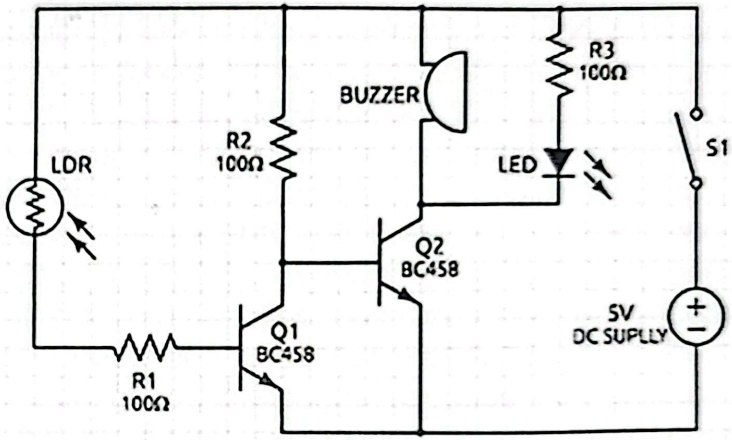

CamScanner

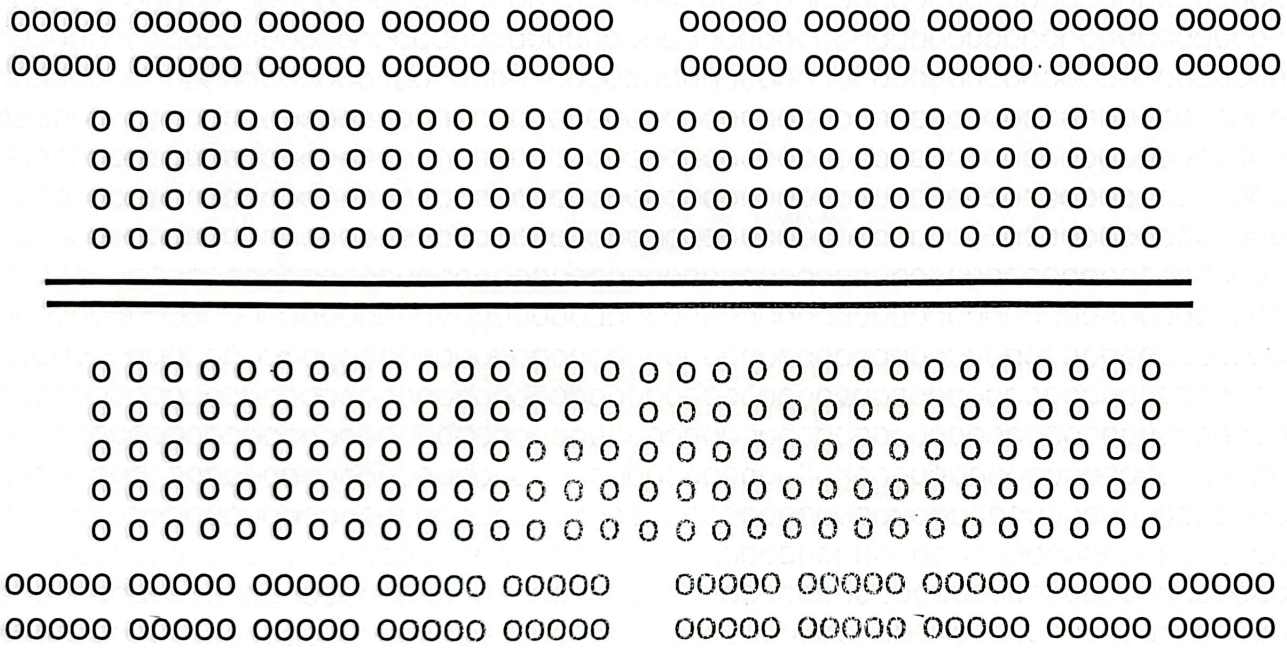

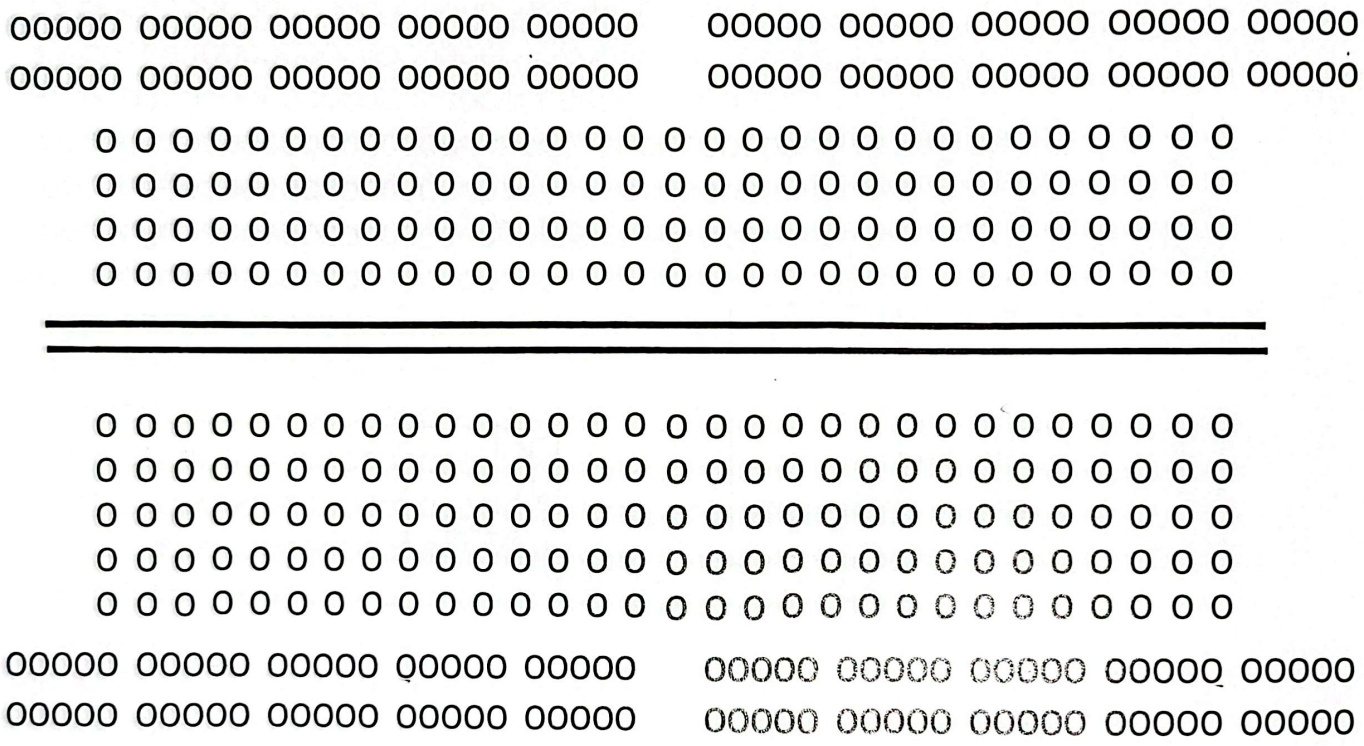

CamScanner

Experiment 5: Draw the bradboard and veroboard loyouts of the circuit diagram shown in figure 5 below.

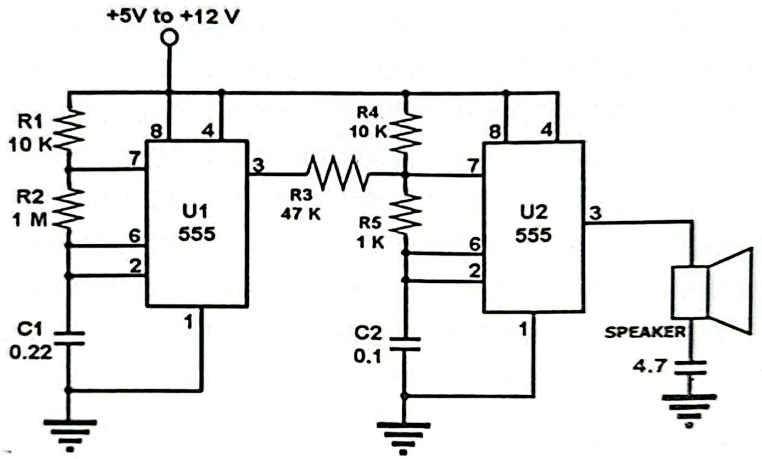

CamScanner

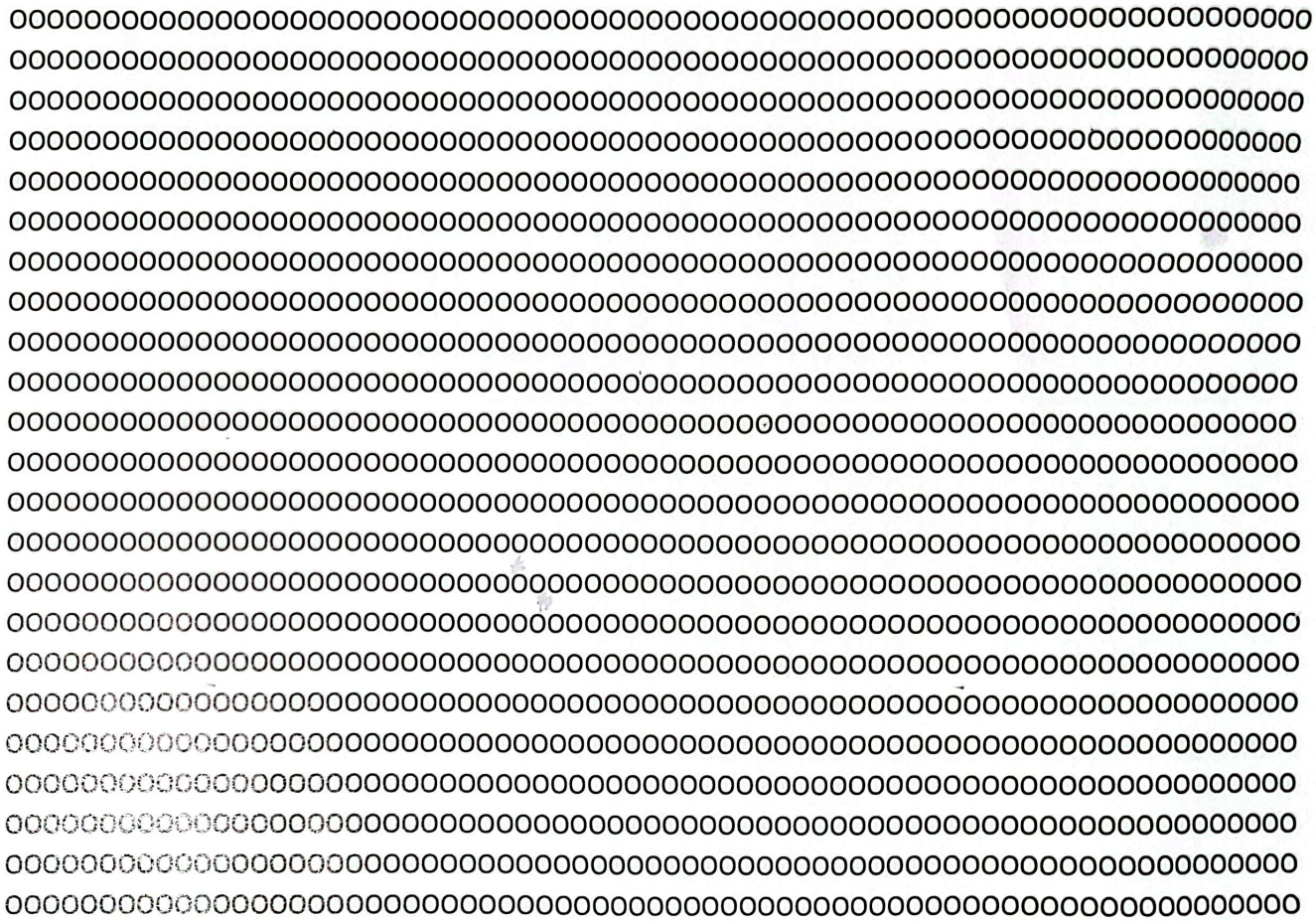

CamScanner

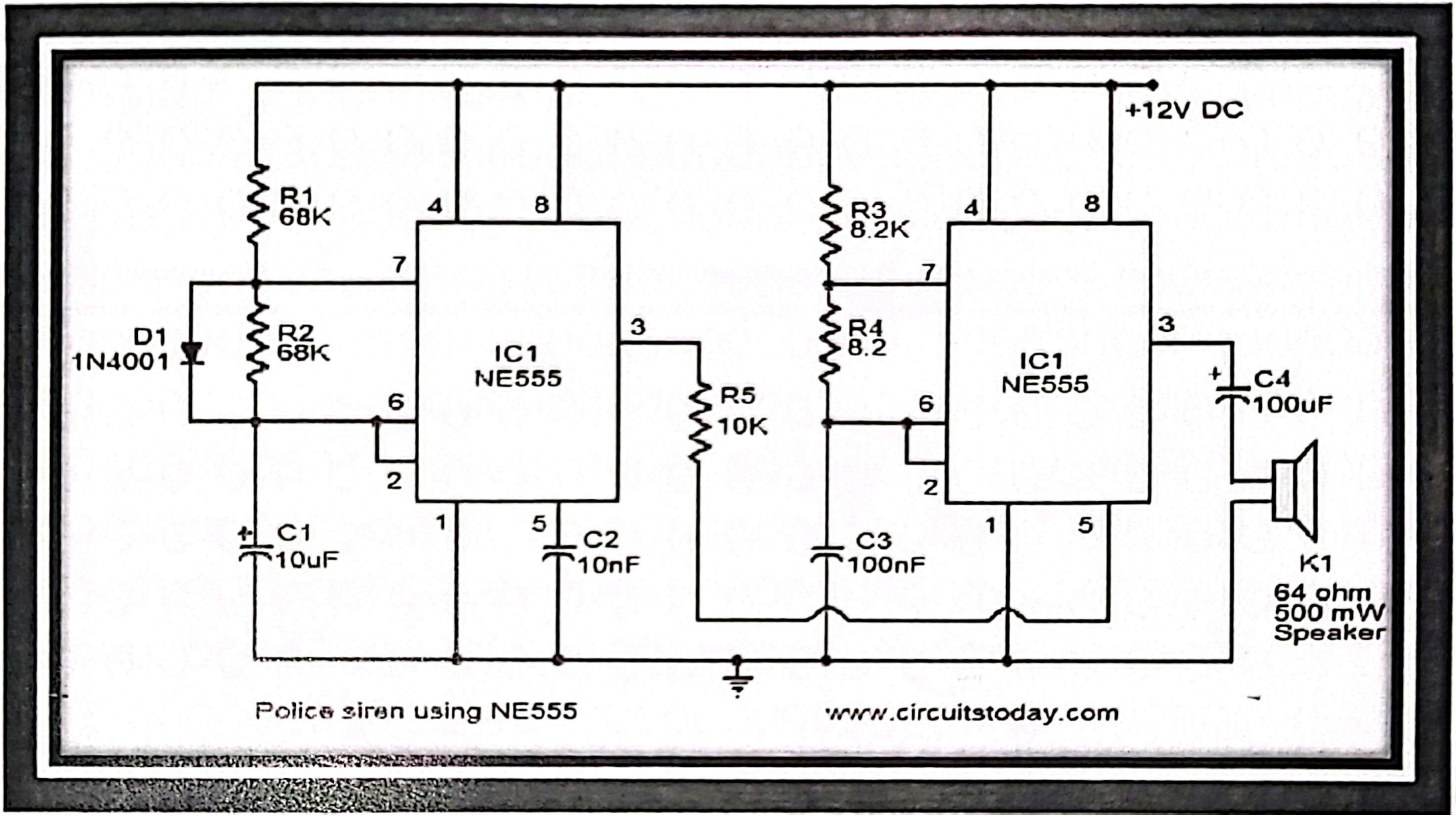
+12V DC
R1
68K
R2
68K
D1
1N4001
IC1
NE555
R3
8.2K
R4
8.2
IC1
NE555
R5
10K
C1
10uF
C2
10nF
C3
100nF
C4
100uF
K1
64 ohm
500 mW
Speaker
Police siren using NE555
www.circuitstoday.com

)0 00000 00000 00000 00000 00000 00000 00000 00000 00000

)0 00000 00000 00000 00000 00000 00000 00000 00000 00000

) 0 0 0 0 0 0 0 0 0 0 0 0 0 0 0 0 0 0 0 0 0 0 0 0 0 0 0 0

) 0 0 0 0 0 0 0 0 0 0 0 0 0 0 0 0 0 0 0 0 0 0 0 0 0 0 0 0

0 0 0 0 0 0 0 0 0 0 0 0 0 0 0 0 0 0 0 0 0 0 0 0 0 0 0 0

0 0 0 0 0 0 0 0 0 0 0 0 0 0 0 0 0 0 0 0 0 0 0 0 0 0 0 0

---

0 0 0 0 0 0 0 0 0 0 0 0 0 0 0 0 0 0 0 0 0 0 0 0 0 0 0 0

0 0 0 0 0 0 0 0 0 0 0 0 0 0 0 0 0 0 0 0 0 0 0 0 0 0 0 0

0 0 0 0 0 0 0 0 0 0 0 0 0 0 0 0 0 0 0 0 0 0 0 0 0 0 0 0

0 0 0 0 0 0 0 0 0 0 0 0 0 0 0 0 0 0 0 0 0 0 0 0 0 0 0 0

0 0 0 0 0 0 0 0 0 0 0 0 0 0 0 0 0 0 0 0 0 0 0 0 0 0 0 0

)00 00000 00000 00000 00000 00000 00000 00000 00000 00000

)00 00000 00000 00000 00000 00000 00000 00000 00000 00000

0000000000000000000000000000000000000000000000000000000000000000000000000000

0000000000000000000000000000000000000000000000000000000000000000000000000000

0000000000000000000000000000000000000000000000000000000000000000000000000000

0000000000000000000000000000000000000000000000000000000000000000000000000000

0000000000000000000000000000000000000000000000000000000000000000000000000000

0000000000000000000000000000000000000000000000000000000000000000000000000000

0000000000000000000000000000000000000000000000000000000000000000000000000000

0000000000000000000000000000000000000000000000000000000000000000000000000000

0000000000000000000000000000000000000000000000000000000000000000000000000000

0000000000000000000000000000000000000000000000000000000000000000000000000000

0000000000000000000000000000000000000000000000000000000000000000000000000000

0000000000000000000000000000000000000000000000000000000000000000000000000000

0000000000000000000000000000000000000000000000000000000000000000000000000000

0000000000000000000000000000000000000000000000000000000000000000000000000000

0000000000000000000000000000000000000000000000000000000000000000000000000000

0000000000000000000000000000000000000000000000000000000000000000000000000000

0000000000000000000000000000000000000000000000000000000000000000000000000000

0000000000000000000000000000000000000000000000000000000000000000000000000000

0000000000000000000000000000000000000000000000000000000000000000000000000000

0000000000000000000000000000000000000000000000000000000000000000000000000000

0000000000000000000000000000000000000000000000000000000000000000000000000000

0000000000000000000000000000000000000000000000000000000000000000000000000000

0000000000000000000000000000000000000000000000000000000000000000000000000000

CamScanner

Experiment 7: Draw the bradboard and veroboard loyouts of the circuit diagram shown below

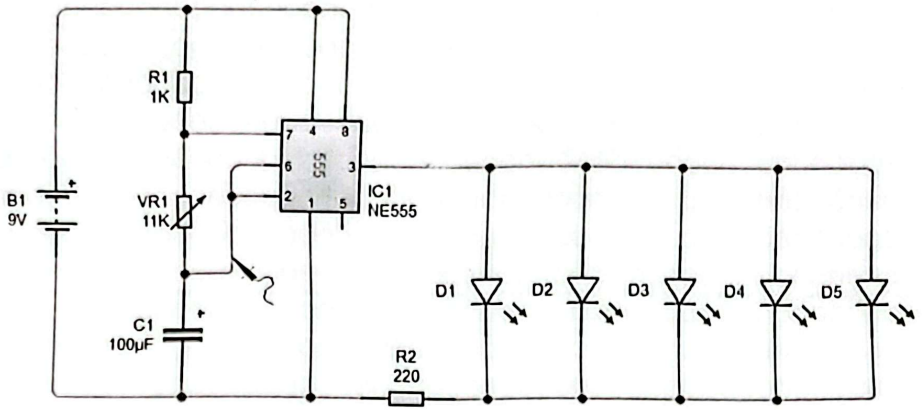

CamScanner

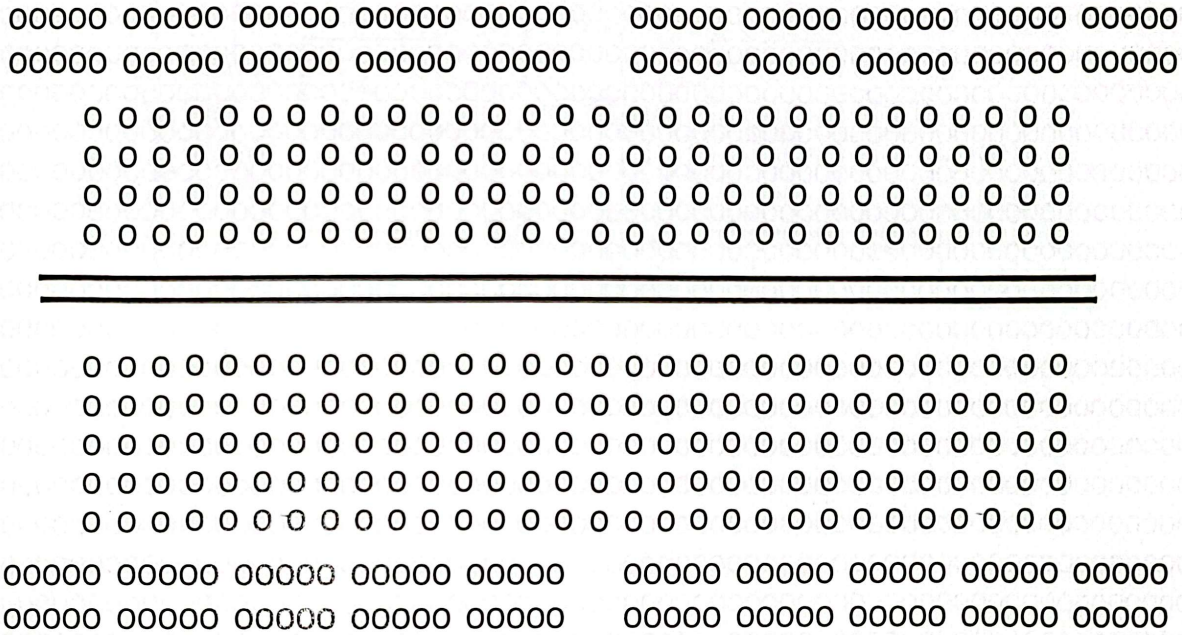

CamScanner

Experiment 8: Draw the bradboard and veroboard loyouts of the circuit diagram shown below

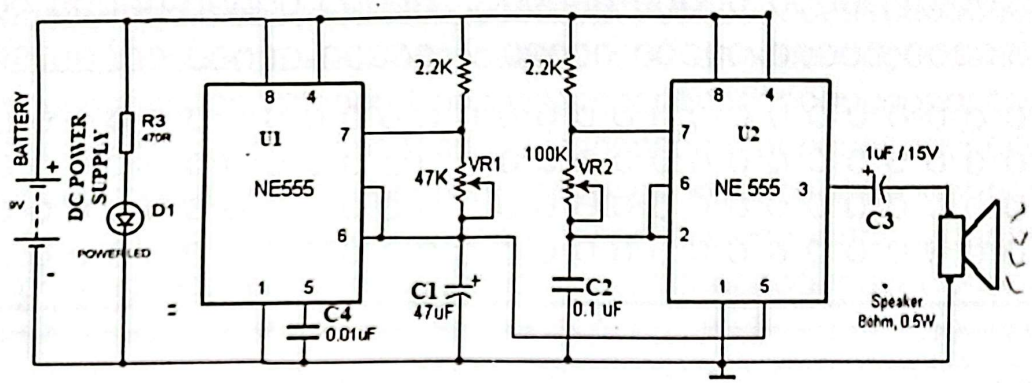

CamScanner

CamScanner

Precautions

For the various experiments, what were the precautions taken?

Experiment 1:

.....

.....

.....

.....

.....

Experiment 2:

.....

.....

.....

.....

.....

Experiment 3:

CamScanner

.....

.....

.....

.....

.....

Experiment 4:

.....

.....

.....

.....

.....

Experiment 5:

.....

.....

.....

.....

.....

Experiment 6:

CamScanner

.....

.....

.....

.....

.....

Experiment 7:

.....

.....

.....

.....

.....

Experiment 8:

.....

.....

.....

.....

.....

CamScanner

CamScanner